PATENTED

PROTTOFOS
LIGHTING MANUFACTURER

7” LED SURFACE MOUNT DOWNLIGHT EM JBOX

PF-SM7R-LED-15W-EM-30K-WH

WET LOCATION | DIMMABLE | EM BATT | 120-277V | 3yr WARRANTY | ETL LISTED

DESCRIPTION

With a 7” LED Ultra-Slim Downlight fixture and EM J-Box kit, this solution offers great security and is an excellent general lighting kit for most applications.

SPECIFICATIONS

SKU	PF-SM7R-LED-15W-EM-30K-WH
FINISH	WHITE
OTHER FINISHES	BLACK, BRUSHED NICKEL, ORB
COLLECTION	EDGE-LIT
MATERIAL	STEEL J-BOX, PC LIGHT HOUSING
DIFFUSER	POLYCARBONATE

BATTERY INFORMATION

Integrated battery offers a switching time of less than 1 second, protection of overcharge and discharge, a self-checking function and has a test button.

EM RUNTIME: >90 Minutes

EM RECHARGE: 24 Hours

PRIMARY LIGHTING

LIGHT SOURCE	15W LED
LUMENS	1257 LM
VOLTAGE	120V - 277V
COLOR TEMP	3000K
CRI	90

DIMENSIONS

DIAMETER	7.93”
HEIGHT	0.67”
WEIGHT	0.7 LBS
EXTENSION	**N/A**
BACKPLATE	**N/A**

PATENT # 12,241,616 | 12,173,871 | 12,379,099

USA PATENTED

Prottofos Corporation
www.prottofos.com

11350 Old Roswell Rd, Ste 1100, Alpharetta, GA 30009
Information contained here is subject to change without notice

7” LED SURFACE MOUNT EM JBOX & ACCESSORIES

PROTTOFOS
LIGHTING MANUFACTURER

ELECTRICAL JUNCTION BOX

The J-BOX Emergency Battery Backup provides reliable power for LED lighting during outages. Compact and easy to install, it offers up to 90 minutes of backup, ensuring safety and continuity for residential and commercial spaces.

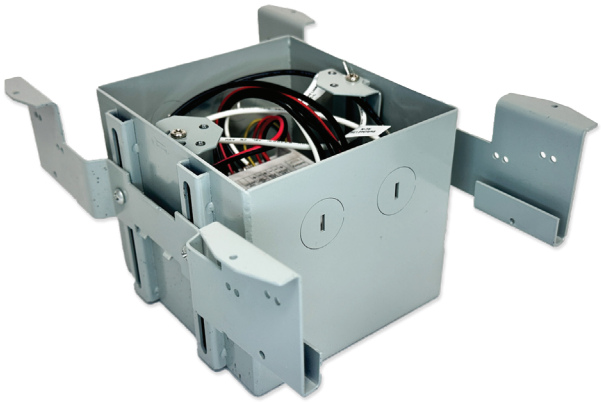

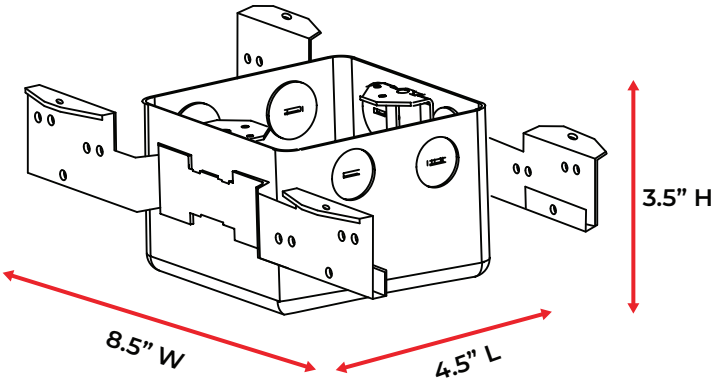

ADDITIONAL ACCESSORIES

1 ¼” EXTENSION RING

Optional extension ring to give more clearance for specialty installation cases.

EXTENSION RING SKU: PF-CL-125-ACER-GY

Prottofos Corporation
www.prottofos.com

11350 Old Roswell Rd, Ste 1100, Alpharetta, GA 30009
Information contained here is subject to change without notice